Contact us

(013) 245-1334
(082) 497-1598

quin@wolfcorp.co.za

15 Jaspis street, Middelburg,
South Africa

WOLFCORP

PRODUCT CATALOGUE

TABLE OF CONTENT

Welcome to the Wolfcorp Product Catalogue

At Wolfcorp, we provide top-tier drilling solutions and consumables built for strength and performance. This catalogue is your guide to reliable products that power tough operations.

Run with the pack—lead the way.

ABOUT US

Precision. Performance. Power.

At WolfCorp, we are committed to delivering top-quality drilling solutions that drive efficiency and productivity. Specializing in drilling consumables, equipment, and accessories, we ensure every product meets the highest industry standards. With a strong focus on innovation and reliability, WolfCorp empowers businesses with cutting-edge tools designed to withstand the toughest conditions.

WolfCorp combines decades of industry knowledge with advanced technology to provide superior drilling consumables and equipment. From high-performance DTH hammers to precision-engineered top hammer tools, we supply products built for endurance and efficiency. Our holistic approach to drilling optimization ensures that our clients receive the best solutions for their unique challenges.

We are your trusted partner in drilling excellence, offering a full range of consumables and equipment for every application. We understand the demands of the industry and strive to provide solutions that increase productivity while lowering operational costs. With a focus on strength, precision, and innovation, we deliver products that keep your operations running at peak performance.

Strength in Every Drill.

WolfCorp is a trusted name in drilling optimization, providing superior consumables and equipment for industries that demand durability and performance. Our extensive product range includes top hammer, down-the-hole (DTH), and rotary drilling solutions, each engineered to maximize efficiency and minimize downtime. With a customer-first approach, we are dedicated to delivering value, reliability, and long-term partnerships.

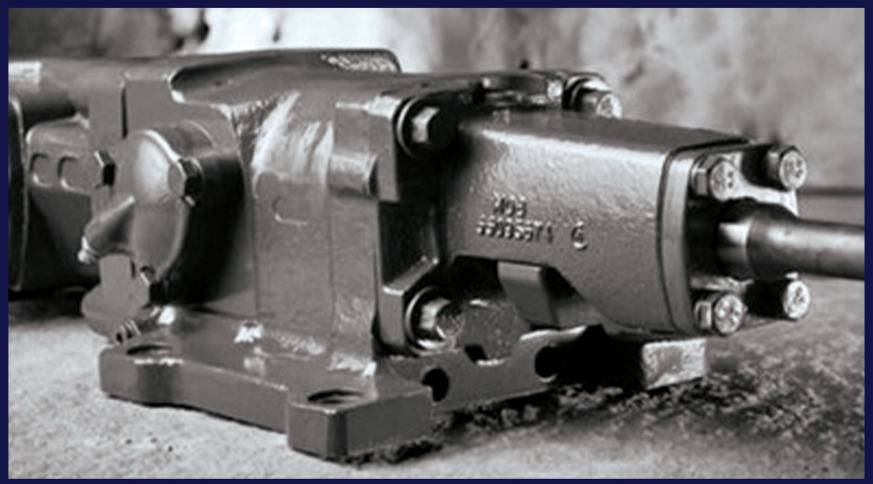

TOP HAMMER

SHANK ADAPTORS

EPIROC

SHANK DESCRIPTION	DRAWING	DIMENSIONS	WEIGHT
COP 1036/1238/1038 H E		R32 x 500mm L x 38mm OD T38 x 500mm L x 38mm OD T45 x 500mm L x 45mm OD	4kg 4,4kg 5kg
COP 1038 HL/1238		T38 x 575mm L x 38mm OD	4,9kg
COP 1038 HD/1238	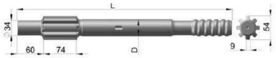	R38 x 485mm L x 38mm OD T38 x 485mm L x 38mm OD	4,2kg
COP 1132		R32 x 410mm L x 35mm OD R32 x 500mm L x 35mm OD	2,5kg 3,1kg
COP 1140, 1435		R32 x 410mm L x 35mm OD	2,8kg
COP 1238		T38 x 575mm L x 45mm OD T45 x 575mm L x 45mm OD	4,9kg 5,8kg
COP 1432, 1532, 1440, 1838 HD/ME		R32 x 435mm L x 38mm OD R38 x 435mm L x 38mm OD T38 x 435mm L x 38mm OD	3,6kg 3,9kg 3,9kg
COP 1432, 1532, 1440, 1838 HD/ME		R32 x 525mm L x 38mm OD R38 x 525mm L x 38mm OD T38 x 525mm L x 38mm OD	4,5kg 5,7kg 5,7kg
COP 1550 EX, COP 1838 EX		T38 x 730mm L x 60mm OD T45 x 730mm L x 60mm OD	9,8kg 10,2kg
COP 1550, COP 1838 ME/ HE		T38 x 525mm L x 52mm OD T45 x 525mm L x 52mm OD T51 x 525mm L x 52mm OD	5,9kg 6,1kg 6,5kg
COP 1838 MUX/HUX	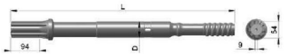	T45 x 730mm L x 52mm OD	10,3kg
COP 1840 HE, COP 1850		T38 x 565mm L x 52mm OD T45 x 565mm L x 52mm OD T51 x 565mm L x 52mm OD	6,5kg 6,9kg 7,1kg

SHANK DESCRIPTION	DRAWING	DIMENSIONS	WEIGHT
COP 1840 HEX, COP 1850 EX		T38 x 770mm L x 60mm OD T45 x 770mm L x 60mm OD T51 x 770mm L x 60mm OD	10,9kg 11kg 11,2kg
COP 2150, COP 2550		T51 x 770mm L x 52mm OD	9,9k
COP 2160, COP 2560		T45 x 770mm L x 60mm OD T51 x 770mm L x 60mm OD	11,6kg 12,1kg
COP 2160 EX, COP 2560 EX		T45 x 770mm L x 63mm OD T51 x 770mm L x 63mm OD	13,3kg 13,5kg
COP 3038		T38 x 435mm L x 45mm OD T38 x 525mm L x 45mm OD	5,1kg 5,3kg
COP 3038HE		T38 x 435mm L x 45mm OD	4,5kg

FURUKAWA

SHANK DESCRIPTION	DRAWING	DIMENSIONS	WEIGHT
PD 200		T38 x 380mm L x 44,5mm OD T38 x 446mm L x 44,5mm OD	3,7kg 4,5kg
PD 200R	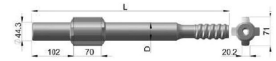	T38 x 485mm L x 44mm OD	4,8kg
HD 300		T38 x 655mm L x 45mm OD T45 x 655mm L x 45mm OD	6,2kg 6,5kg
HD 609		T38 x 620mm L x 45mm OD T38 x 690mm L x 45mm OD T45 x 620mm L x 45mm OD	6kg 6,4kg 6,6kg
HD 609RP		T38 x 865mm L x 44,8mm OD T45 x 865mm L x 44,8mm OD	8,4kg 9kg
HD 612		T45 x 710mm L x 50,8mm OD T51 x 710mm L x 50,8mm OD	8,7kg 9,9kg

FURUKAWA

SHANK DESCRIPTION	DRAWING	DIMENSIONS	WEIGHT
HD 709		T38 x 620mm L x 45mm OD T38 x 590mm L x 45mm OD T45 x 590mm L x 45mm OD T45 x 620mm L x 45mm OD	6,1kg 6kg 6,4kg 6,7kg
HD 709RP		T38 x 785mm L x 45mm OD T45 x 785mm L x 45mm OD T38 x 815mm L x 45mm OD T45 x 815mm L x 45mm OD	9,2kg 9,5kg 9,3kg 9,6kg
HD 712		T45 x 790mm L x 50,8mm OD T45 x 590mm L x 50,8mm OD T51 x 590mm L x 50,8mm OD T51 x 790mm L x 50,8mm OD	10,5kg 8,7kg 8,8kg 10,9kg
HD 712RP		T45 x 785mm L x 51mm OD T51 x 785mm L x 51mm OD T38 x 885mm L x 51mm OD T51 x 885mm L x 51mm OD T45 x 885mm L x 51mm OD	10kg 10kg 11,5kg 13,5kg 12,5kg
HD 715		T45 x 790mm L x 58mm OD T51 x 590mm L x 58mm OD T51 x 790mm L x 58mm OD	11,3kg 6,8kg 12,5kg
HD 715RP		T51 x 885mm L x 58mm OD T45 x 885mm L x 58mm OD	15,9gk 14,4kg

GARDNER-DENVER

SHANK DESCRIPTION	DRAWING	DIMENSIONS	WEIGHT
HPR 1 H		T38 x 744mm L x 44,3mm OD	6kg
HPR 2		T51 x 914mm L x 50,7mm OD	14,1kg
HPR 5123	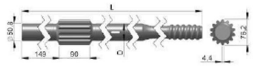	T45 x 770mm x 50,8mm OD T51 x 770mm x 50,8mm OD	12kg 12kg
HPR 6030		GT60 x 1041mm x 60,2mm OD	21,7kg

INGERSOLL-RAND

SHANK DESCRIPTION	DRAWING	DIMENSIONS	WEIGHT
URD 475, 550, VL120, EVL 130, VL140 & F16		R32 x 380mm L x 44,5mm OD T38 x 380mm L x 44,3mm OD T38 x 446mm L x 44,3mm OD	3,7kg 3,7kg 4,5kg
YH 65, 70, 80, 8019	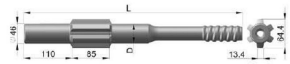	T38 x 613mm L x 45mm OD T45 x 610mm L x 45mm OD T38 x 580mm L x 45mm OD T45 x 580mm L x 46mm OD T38 x 495mm L x 45mm OD T45 x 495mm L x 45mm OD	6,2kg 6,8kg 5,5kg 5,5kg 5kg 5,4kg
YH 65 RP, 70 RP, 75 RP & 80 RP		T45 x 700mm L x 45mm OD T45 x 700mm L x 45mm OD T38 x 820mm L x 46mm OD T45 x 820mm L x 46mm OD	8kg 8kg 9kg 9kg
YH 70 A	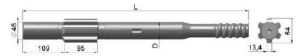	T38 x 585mm L x 45mm OD	6,8kg
YH 80 A		T45 x 495mm x 50,8mm OD T45 x 638mm x 50,8mm OD	5,9kg 7,8kg

MONTABERT

SHANK DESCRIPTION	DRAWING	DIMENSIONS	WEIGHT
HC 20(Female)		R32 x 187mm L x 45mm OD	1,8kg
HC 25(Female)		R32 x 202mm L x 45mm OD	2kg
HC40 (Female)		R32 x 270mm Lx 45,0mm OD	4,1kg
HC 40, 50		R32 x 372mm L x 38mm OD T38 x 372mm L x 38mm OD R38 x 381mm L x 38mm OD R32 x 388mm L x 38mm OD T38 x 438mm L x 38mm OD R32 x 440mm L x 38mm OD R32 x 447mm L x 38mm OD R38 x 447mm L x 38mm OD T38 x 447mm L x 38mm OD	3,4kg 3,5kg 3,7kg 3,5kg 3,5kg 4kg 3,5kg 3,7kg 4kg

MONTABERT

SHANK DESCRIPTION	DRAWING	DIMENSIONS	WEIGHT
HC 80, HC 90, HC 105	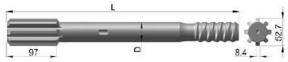	R38 x 440mm L x 38mm OD T38 x 450mm L x 38mm OD T38 x 508mm L x 38mm OD R32 x 440mm L x 38mm OD T38 x 440mm L x 38mm OD	3,9kg 4kg 4,2kg 3,6kg 3,9g
HC 80RP		T38 x 670mm L x 45mm OD T45 x 670mm L x 45mm OD	7,2kg 7,9kg
HC 95RP		T38 x 503mm L x 45mm OD T45 x 518mm L x 45mm OD R38 x 503mm L x 45mm OD	6,5kg 6,6kg 6kg
HC 108		T38 x 410mm L x 45mm OD	5,8kg
HC 110		T38 x 415mm L x 45mm OD T45 x 415mm L x 45mm OD T45 x 425mm L x 45mm OD	4,6kg 5,1kg 5kg
HC 120, 150		T45 x 490mm L x 45mm OD T38 x 490mm L x 45mm OD	5,8kg 5,4kg
HC 120RP, 150RP, 155RP, 158RP		T51 x 670mm L x 51mm OD T45 x 670mm L x 50,9mm OD	9,3kg 8,6kg
HC 200	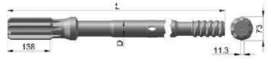	T51 x 840mm L x 51mm OD	13,6kg
HC 200A		GT60 x 850mm L x 60mm OD	16,8kg
HC 200RP		GT60 x 838mm L x 60mm OD	17kg

SANDVIK

SHANK DESCRIPTION	DRAWING	DIMENSIONS	WEIGHT
HL300		R32 x 400mm L x 32mm OD	2,6kg
HL 300S		R32 x 245mm L x 45mm OD	2,6kg
L400, 410, 500, 510 & 550		R32 x 380mm L x 32mm OD	2kg
HLR 438LS, 438TS, HL 538, HL538L, L550S		R32 x 450mm L x 38mm OD R38 x 450mm L x 38mm OD T38 x 455mm L x 38mm OD T38 x 545mm L x 38mm OD	3,8kg 4kg 4,1kg 4,7kg
HL 500 S-38 / 510 S-38 / 510 B / 510 LH		R32 x 460mm L x 38mm OD R38 x 460mm L x 38mm OD T38 x 460mm L x 38mm OD R38 x 500mm L x 38mm OD T38 x 500mm L x 38mm OD	3,7kg 3,9kg 4kg 3,9kg 4kg
HL 500-45 / 510-45		R32 x 550mm L x 45mm OD T38 x 550mm L x 45mm OD T45 x 550mm L x 45mm OD	5,3kg 5,3kg 5,8kg
HL 550 SUPER / 560 SUPER / 510 S-45		R38 x 500mm L x 45mm OD T38 x 500mm L x 45mm OD	5,3kg 5,3kg
HLX 5 / HLX 5T		R32 x 500mm L x 45mm OD T38 x 500mm L x 45mm OD R38 x 500mm L x 45mm OD R32 x 575mm L x 45mm OD T38 x 575mm L x 45mm OD T45 x 575mm L x 45mm OD	5,1kg 5,1kg 5,2kg 5,5kg 5,7kg 5,8kg
HL 600-45 / 600 S-45		T38 x 600mm L x 45mm OD T45 x 600mm L x 45mm OD T38 x 525mm L x 45mm OD T45 x 525mm L x 45mm OD	6,4kg 6,4kg 5,7kg 5,8kg

SANDVIK

SHANK DESCRIPTION	DRAWING	DIMENSIONS	WEIGHT
HL 600-52		T45 x 650mm L x 52mm OD T51 x 650mm L x 52mm OD	6,4kg 6,4kg
HL 650-45 / 700-45 / 700T-45 / 710-45 / 800T-45		T38 x 600mm L x 45mm OD T45 x 600mm L x 45mm OD	7kg 7,5kg
HL 650-52 / 700-52 / PE-52 / S-52 / 710-52 / S-52 / PE-52 / SPE-52 / 800T-52 / PE-52		T38 x 600mm L x 52mm OD T45 x 600mm L x 52mm OD T51 x 600mm L x 52mm OD	8kg 8,5kg 8,6kg
HL 1000-52 / 1000 S-52		T45 x 670mm L x 52mm OD T51 x 670mm L x 52mm OD T45 x 590mm L x 52mm OD T51 x 590mm L x 52mm OD	10kg 10,7kg 8,9kg 9,3kg
HL 1000-60		T51 x 670mm L x 60mm OD GT60 x 670mm L x 60mm OD	12,5kg 12,9kg
HL 1000 PE-65 / HL 1500 PE-65 / HL 1560 T-65		T51 x 760mm L x 65mm OD GT60 x 760mm L x 65mm OD	15,9kg 16,9kg
HL 1500-52 / 1500 T-52		T51 X 710mm L x 52mm OD	11,2kg
HL 1500-60 / 1500 T-60		T51 x 760mm L x 60mm OD GT60 x 760mm L x 60mm OD T51 x 710mm L x 60mm OD	13,3kg 14,7kg 13,3kg
HL 1500-80 / 1500 T-80	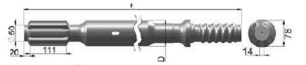	GT60 x 760mm L x 80mm OD	21kg
RD 314 (female)		R32 x 205mm L x 44,9mm OD	2kg
RD 525		T38 x 525mm L x 44,9mm OD T45 x 525mm L x 44,9mm OD T38 x 600mm L x 44,9mm OD T38 x 745mm L x 44,9mm OD	5,95kg 5,8kg 6,24kg 7,72kg

COUPLINGS / ADAPTORS

COUPLINGS

THREAD (F1)	THREAD (F2)	LENGTH (MM)	DIAMETER (MM)
R25	R25	160	35
R32	R32	150	44
T38	T38	191	55
T45	T45	210	63
T51	T51	225	76

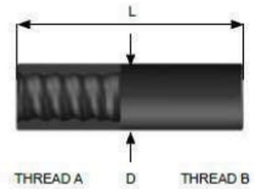

REDUCTION COUPLINGS

THREAD (F1)	THREAD (F2)	LENGTH (MM)	DIAMETER (MM)
Taper (11/12˚)	HEX 22	80	34
R25	R32	160	43
R32	T38	195	55
T38	T45	180	58
T45	T51	218	71

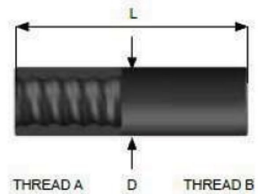

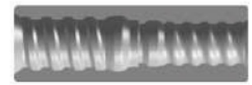

ADAPTORS

THREAD (FEMALE)	THREAD (MALE)	LENGTH (MM)	DIAMETER (MM)
R25	R32	173	45
R32	T38	225	45
T38	R32	270	57
T38	T45	285	57
T45	T38	265	63
T45	T51	285	63
T51	T45	285	71
GT60	T51	325	78

TAPER BITS

DIAMETER (MM)	LENGTH (MM)	NO. OF BUTTONS	BUTTONS X BUTTON DIAMETER		WEIGHT (KG)
			Gauge	Centre	
28	54	5	4	1	0.2
32	54	7	5	2	0.2
34	54	7	5	2	0.2
36	54	7	5	2	0.2
38	54	7	5	2	0.2
40	54	7	5	2	0.4
43	56	7	5	2	0.4
45	57	9	6	3	0.6

FORGED COLLAR TAPERED RODS

LENGTH	DIAMETER	SHANK LENGTH	DEGREE OF TAPER	WEIGHT
0,3m	22mm	159mm	11/12°	0,9kg
0,6m	22mm	159mm	11/12°	1,8kg
0,9m	22mm	159mm	11/12°	2,7kg
1,2m	22mm	159mm	11/12°	3,6kg
1,5m	22mm	159mm	11/12°	4,5kg
1,8m	22mm	159mm	11/12°	5,4kg
2m	22mm	159mm	11/12°	6kg
2,2m	22mm	159mm	11°	6,6kg
2,4m	22mm	159mm	11°	7,2kg
2,6m	22mm	159mm	11°	7,8kg
2,8m	22mm	159mm	11°	8,4kg
3m	22mm	159mm	11°	9kg
3,6m	22mm	159mm	11°	10,8kg
4m	22mm	159mm	11°	12kg
4,2m	22mm	159mm	11°	12,6kg
4,7m	22mm	159mm	11°	14,1kg

HEX22

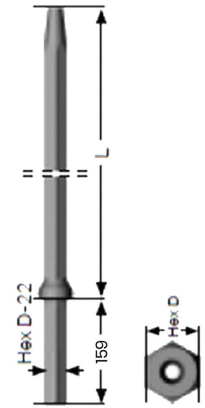

LENGTH	DIAMETER	SHANK LENGTH	DEGREE OF TAPER	WEIGHT
0,3m	25mm	159mm	11/12°	1,04kg
0,6m	25mm	159mm	11/12°	2,07kg
0,9m	25mm	159mm	11/12°	3,11kg
1,2m	25mm	159mm	11/12°	4,14kg
1,5m	25mm	159mm	11/12°	5,18kg
1,8m	25mm	159mm	11/12°	6,21kg
2m	25mm	159mm	11/12°	6,90kg
2,2m	25mm	159mm	11°	7,59kg
2,4m	25mm	159mm	11°	8,28kg
2,6m	25mm	159mm	11°	8,97kg
2,8m	25mm	159mm	11°	9,66kg
3m	25mm	159mm	11°	10,35kg
3,6m	25mm	159mm	11°	12,42kg
4m	25mm	159mm	11°	13,80kg
4,2m	25mm	159mm	11°	14,49kg
4,7m	25mm	159mm	11°	16,22kg

HEX25

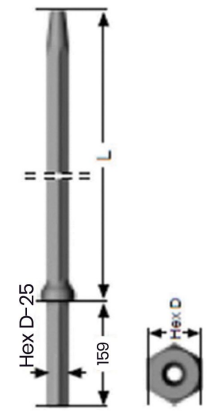

RUBBER COLLAR TAPERED RODS

LENGTH	DIAMETER	SHANK LENGTH	DEGREE OF TAPER	WEIGHT
0,3m	22mm	159mm	11/12°	0,9kg
0,6m	22mm	159mm	11/12°	1,8kg
0,9m	22mm	159mm	11/12°	2,7kg
1,2m	22mm	159mm	11/12°	3,6kg
1,5m	22mm	159mm	11/12°	4,5kg
1,8m	22mm	159mm	11/12°	5,4kg
2m	22mm	159mm	11/12°	6kg
2,2m	22mm	159mm	11°	6,6kg
2,4m	22mm	159mm	11°	7,2kg
2,6m	22mm	159mm	11°	7,8kg
2,8m	22mm	159mm	11°	8,4kg
3m	22mm	159mm	11°	9kg
3,6m	22mm	159mm	11°	10,8kg
4m	22mm	159mm	11°	12kg
4,2m	22mm	159mm	11°	12,6kg
4,7m	22mm	159mm	11°	14,1kg

HEX22

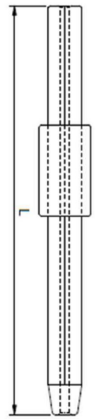

LENGTH	DIAMETER	SHANK LENGTH	DEGREE OF TAPER	WEIGHT
0,3m	25mm	159mm	11/12°	1,04kg
0,6m	25mm	159mm	11/12°	2,07kg
0,9m	25mm	159mm	11/12°	3,11kg
1,2m	25mm	159mm	11/12°	4,14kg
1,5m	25mm	159mm	11/12°	5,18kg
1,8m	25mm	159mm	11/12°	6,21kg
2m	25mm	159mm	11/12°	6,90kg
2,2m	25mm	159mm	11°	7,59kg
2,4m	25mm	159mm	11°	8,28kg
2,6m	25mm	159mm	11°	8,97kg
2,8m	25mm	159mm	11°	9,66kg
3m	25mm	159mm	11°	10,35kg
3,6m	25mm	159mm	11°	12,42kg
4m	25mm	159mm	11°	13,80kg
4,2m	25mm	159mm	11°	14,49kg
4,7m	25mm	159mm	11°	16,22kg

HEX25

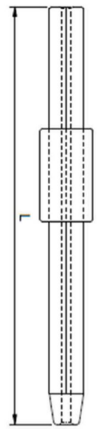

THREADED BUTTON BITS & RODS

THREADED BUTTON BITS

R23

BIT DIAMETER	GAUGE BUTTON QTY x SIZE	CENTER BUTTONS QTY x SIZE	BUTTON SHAPE	BIT FACE DESIGN	BIT BODY DESIGN
33mm	5 x 7	2 x 7	Ballistic	FF	STD
35mm	5 x 8	2 x 7	Ballistic	FF	STD
38mm	5 x 8	2 x 7	Ballistic	FF	STD
41mm	5 x 9	2 x 8	Ballistic	FF	STD
45mm	6 x 9	3 x 8	Ballistic	FF	STD

R25

BIT DIAMETER	GAUGE BUTTON QTY x SIZE	CENTER BUTTONS QTY x SIZE	BUTTON SHAPE	BIT FACE DESIGN	BIT BODY DESIGN
35mm	5 x 8	2 x 7	B/S	FF	STD
38mm	5 x 8	2 x 7	B/S	FF	STD
41mm	5 x 9	2 x 8	B/S	FF	STD
45mm	6 x 9	3 x 8	B/S	FF	STD
48mm	6 x 10	3 x 8	B/S	FF	STD

R32

BIT DIAMETER	GAUGE BUTTON QTY x SIZE	CENTER BUTTONS QTY x SIZE	BUTTON SHAPE	BIT FACE DESIGN	BIT BODY DESIGN
41mm	6 x 9	3 x 8	B/S	FF	STD
43mm	6 x 10	3 x 8	B/S	FF	STD
45mm	6 x 10	3 x 9	B/S	FF	STD
48mm	6 x 10	3 x 9	B/S	FF	STD
51mm	6 x 10	3 x 9	B/S	FF	STD
64mm	6 x 12	3 x 11	B/S	FF/DC	STD/Retract

T45

BIT DIAMETER	GAUGE BUTTON QTY x SIZE	CENTER BUTTONS QTY x SIZE	BUTTON SHAPE	BIT FACE DESIGN	BIT BODY DESIGN
76mm	8 x 12	5 x 11	B/S	FF/DC	STD/Retract
89mm	8 x 13	5 x 13	B/S	FF/DC	STD/Retract
102mm	9 x 13	9 x 11	B/S	FF/DC	STD/Retract
115mm	9 x 13	9 x 12	B/S	FF/DC	STD/Retract
127mm	9 x 14	9 x 13	B/S	FF/DC	STD/Retract

T51

BIT DIAMETER	GAUGE BUTTON QTY x SIZE	CENTER BUTTONS QTY x SIZE	BUTTON SHAPE	BIT FACE DESIGN	BIT BODY DESIGN
89mm	8 x 13	5 x 13	B/S	FF/DC	STD/Retract
102mm	9 x 13	9 x 11	B/S	FF/DC	STD/Retract
115mm	9 x 14	9 x 14	B/S	FF/DC	STD/Retract
127mm	9 x 14	10 x 13	B/S	FF/DC	STD/Retract
140mm	9 x 16	10 x 14	B/S	FF/DC	STD

GT60

BIT DIAMETER	GAUGE BUTTON QTY x SIZE	CENTER BUTTONS QTY x SIZE	BUTTON SHAPE	BIT FACE DESIGN	BIT BODY DESIGN
92mm	8 x 14	6 x 12	B/S	FF/DC	STD
96mm	8 x 14	6 x 12	B/S	FF/DC	STD
102mm	9 x 14	9 x 12	B/S	FF/DC	STD/Retract
115mm	9 x 14	10 x 12	B/S	FF/DC	STD/Retract
127mm	9 x 16	10 x 14	B/S	FF/DC	STD/Retract
140mm	9 x 16	10 x 14	B/S	FF/DC	STD/Retract
152mm	9 x 16	12 x 14	B/S	FF/DC	STD/Retract

THREADED RODS

DESCRIPTION	LENGTH	DIAMETER
R23 Male-Female Hex 22 Rod	0,8m	Hex 22
	0,9m	Hex 22
	1,2m	Hex 22
	2m	Hex 22
R25 Male-Female Hex 25 Rod	0,6m	Hex 25
	1,2m	Hex 25
	2,1m	Hex 25
	2m	Hex 25
R25 Male-Male Hex 25 Rod	1,2m	Hex 25
	1,5m	Hex 25
	1,8m	Hex 25
	2,4m	Hex 25
	3,1m	Hex 25
R25 Male x R32 Male Hex 25 Rod	1,8m	Hex 25
	2,2m	Hex 25
	2,5m	Hex 25
	2,8m	Hex 25
	3,1m	Hex 25
	3,7m	Hex 25

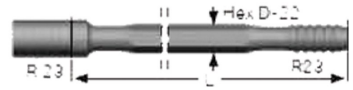

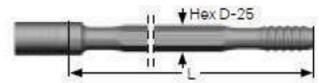

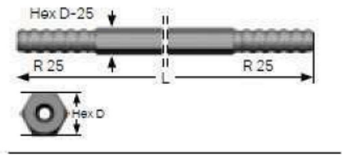

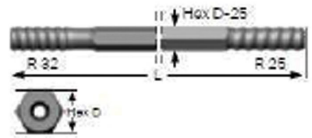

DESCRIPTION	LENGTH	DIAMETER
R32 Male x R32 Male Round 32 Rod	2,4m	Round 32
	3,1m	Round 32
	3,7m	Round 32
R32 Male x R32 Female Round 32 Rod	3,1m	Round 32
	3,7m	Round 32
T38 Male x R32 Male Hex 32/35 Rod	3,1m	Hex 32/35mm
	3,7m	Hex 32/35mm
	4,3m	Hex 32/35mm
T38 Male x T38 Female Round 39 Rod	1,2m	Round 39mm
	1,8m	Round 39mm
	2,4m	Round 39mm
	3,1m	Round 39mm
T45 Male x T45 Female Rod	3,1m	46mm
	3,7m	46mm
	4,3m	46mm
T45 Male x T45 Male Rod	3,1m	46mm
	3,7m	46mm
	4,3m	46mm

DESCRIPTION	LENGTH	DIAMETER
T51 Male x T51 Female Rod	3,7m	52mm
	4,3m	52mm
	6,1m	52mm
T51 Male x T51 Male Rod	3,7m	52mm
	4,3m	52mm
	6,1m	52mm
GT60 Male x GT60 Female Rod	4,3m	60mm
	6,1m	60mm

THREADED REAMER BUTTON BITS

R32

BIT DIAMETER	GAUGE BUTTON QTY x SIZE	CENTER BUTTONS QTY x SIZE	BUTTON SHAPE	BIT BODY DESIGN
76mm	9 x 10	3 x 9	Spherical	Dome/Pilot
89mm	10 x 10	9 x 9	Spherical	Dome/Pilot
102mm	12 x 13	3 x 10	Spherical	Dome/Pilot

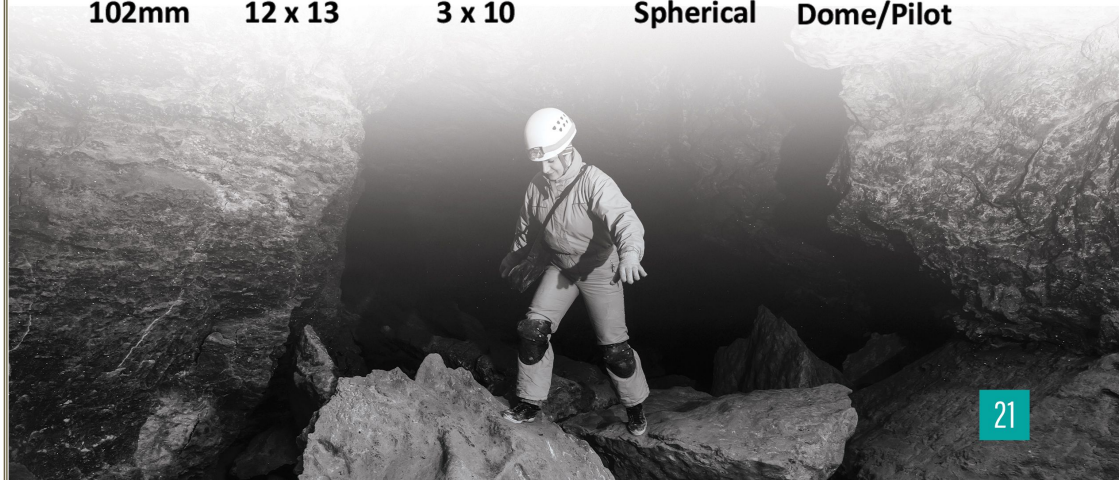

DOWN THE HOLE

DHD3.5 3.5" HAMMER

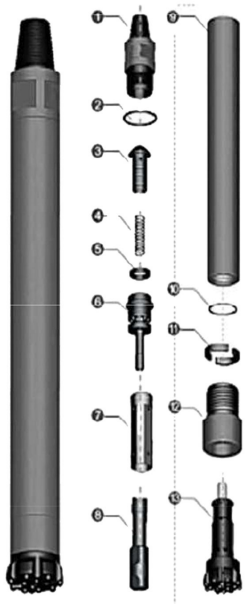

HIGH AIR PRESSURE DTH HAMMERS WITH FOOT VALVE	PART DESCRIPTION	WEIGHT (KG)	PART NUMBER
1	Top Sub	4.20	CD35-01
2	"O" Ring of Top Sub	0.01	CD35-02
3	Check Valve	0.20	CD35-03
4	Spring	0.02	CD35-04
5	Compression Buffer	0.02	CD35-05
6	Air Distributor	1.40	CD35-06
7	Internal Cylinder	1.50	CD35-07
8	Piston	5.60	CD35-08
9	External Cylinder	9.40	CD35-09
10	"O" Ring of Stop Ring	0.01	CD35-10
11	Stop Ring	0.15	CD35-11
12	Drive Chuck	1.90	CD35-12
13	Drill Bit		CD35-13

Technical Parameters

Length (Without Bit)	Weight (Without Bit)	External Diameter	Bit Shank	Hole Range	Connection Thread
918mm	24.4 Kg	⌀82 mm	DHD3.5 CD35	⌀90 - ⌀105	API 2 3/8" Reg

Working Pressure	Impact Rate at 1.5 Mpa	Recommended Rotation Speed	Air Consumption	
			1.0 Mpa	1.5 Mpa
1.0 - 1.5 Mpa	28 Hz	25 - 40 r/min	4.5 m^3/min	9.0 m^3/min

DHD3.5 3.5" HAMMER WITHOUT FOOT VALVE

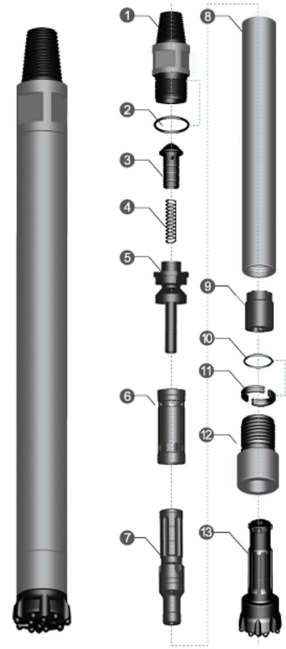

HIGH AIR PRESSURE DTH HAMMERS WITHOUT FOOT VALVE	PART DESCRIPTION	WEIGHT (KG)	PART NUMBER
1	Top Sub	4.20	CD35A-01
2	"O" Ring of Top Sub	0.01	CD35A-02
3	Check Valve	0.20	CD35A-03
4	Spring	0.02	CD35A-04
5	Air Distributor	0.80	CD35A-05
6	Internal Cylinder	1.30	CD35A-06
7	Piston	5.50	CD35A-07
8	External Cylinder	10.0	CD35A-08
9	Guided Sleeve	1.00	CD35A-09
10	"O" Ring of Stop Ring	0.05	CD35A-10
11	Stop Ring	0.15	CD35A-11
12	Drive Chuck	1.90	CD35A-12
13	Drill Bit		CD35A-13

Technical Parameters

Length (Without Bit)	Weight (Without Bit)	External Diameter	Bit Shank	Hole Range	Connection Thread
888mm	25.1 Kg	⌀82 mm	CD35A	⌀90 - ⌀105	API 2 3/8" Reg

Working Pressure	Impact Rate at 1.5 Mpa	Recommended Rotation Speed	Air Consumption	
			1.0 Mpa	1.5 Mpa
1.0 - 1.5 Mpa	25 Hz	25 - 40 r/min	3.8 m^3/min	7.5 m^3/min

DHD340 4" HAMMER

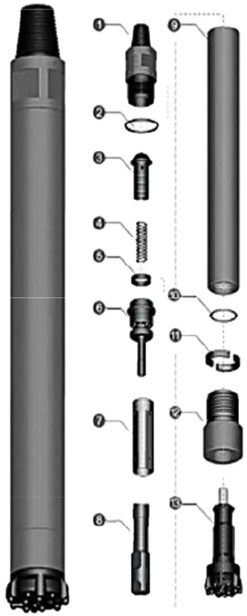

HIGH AIR PRESSURE DTH HAMMERS WITH FOOT VALVE	PART DESCRIPTION	WEIGHT (KG)	PART NUMBER
1	Top Sub	6.50	CD45-01
2	"O" Ring of Top Sub	0.01	CD45-02
3	Check Valve	0.42	CD45-03
4	Spring	0.04	CD45-04
5	Compression Buffer	0.04	CD45-05
6	Air Distributor	2.20	CD45-06
7	Internal Cylinder	2.30	CD45-07
8	Piston	9.00	CD45-08
9	External Cylinder	15.8	CD45-09
10	"O" Ring of Stop Ring	0.01	CD45-10
11	Stop Ring	0.20	CD45-11
12	Drive Chuck	3.50	CD45-12
13	Drill Bit		CD45-13

Technical Parameters

Length (Without Bit)	Weight (Without Bit)	External Diameter	Bit Shank	Hole Range	Connection Thread
1033 mm	40.0 Kg	⌀99 mm	Cop44 DHD340 CD45	⌀110 - ⌀135	API 2 3/8" Reg

Working Pressure	Impact Rate at 1.5 Mpa	Recommended Rotation Speed	Air Consumption		
			1.0 Mpa	1.8 Mpa	2.4 Mpa
1.0 - 2.5 Mpa	27 Hz	25 - 40 r/min	6 m^3/min	10 m^3/min	15 m^3/min

MISSION40 4" HAMMER

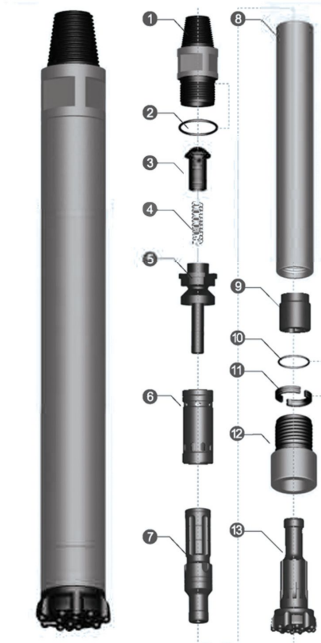

HIGH AIR PRESSURE DTH HAMMERS WITH FOOT VALVE	PART DESCRIPTION	WEIGHT (KG)	PART NUMBER
1	Top Sub	6.50	CM40A-01
2	"O" Ring of Top Sub	0.01	CM40A-02
3	Check Valve	0.35	CM40A-03
4	Spring	0.05	CM40A-04
5	Air Distributor	1.20	CM40A-05
6	Internal Cylinder	2.10	CM40A-06
7	Piston	8.50	CM40A-07
8	External Cylinder	14.8	CM40A-08
9	External Cylinder	1.80	CM40A-09
10	"O" Ring of Stop Ring	0.005	CM40A-10
11	Stop Ring	0.30	CM40A-11
12	Drive Chuck	3.80	CM40A-12
13	Drill Bit		CM40A-13

Technical Parameters

Length (Without Bit)	Weight (Without Bit)	External Diameter	Bit Shank	Hole Range	Connection Thread
1005 mm	39.4 Kg	⌀99 mm	Mission40 CM40A	⌀110 - ⌀130	API 2 3/8" Reg

Working Pressure	Impact Rate at 1.5 Mpa	Recommended Rotation Speed	Air Consumption		
			1.0 Mpa	1.8 Mpa	2.4 Mpa
1.0 - 2.5 Mpa	30 Hz	25 - 40 r/min	5 m^3/min	9 m^3/min	14 m^3/min

DHD340 HAMMER WITHOUT FOOT VALVE

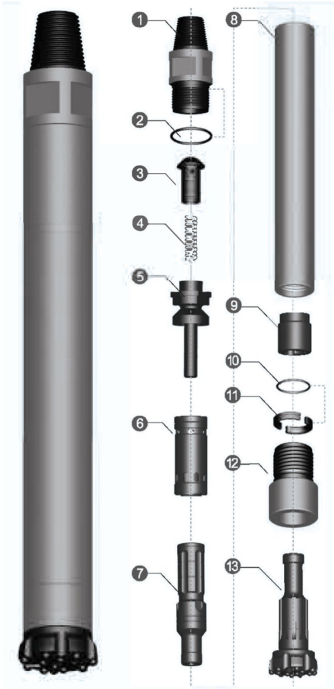

HIGH AIR PRESSURE DTH HAMMERS WITHOUT FOOT VALVE	PART DESCRIPTION	WEIGHT (KG)	PART NUMBER
1	Top Sub	6.50	CD45A-01
2	"O" Ring of Top Sub	0.01	CD45A-02
3	Check Valve	0.35	CD45A-03
4	Spring	0.05	CD45A-04
5	Air Distributor	1.20	CD45A-05
6	Internal Cylinder	2.10	CD45A-06
7	Piston	8.50	CD45A-07
8	External Cylinder	15.2	CD45A-08
9	Guided Sleeve	1.30	CD45A-09
10	"O" Ring of Stop Ring	0.01	CD45A-10
11	Stop Ring	0.30	CD45A-11
12	Drive Chuck	3.40	CD45A-12
13	Drill Bit		CD45A-13

Technical Parameters

Length (Without Bit)	Weight (Without Bit)	External Diameter	Bit Shank	Hole Range	Connection Thread
1011 mm	38.9 Kg	⌀ 99 mm	Cop44 DHD340 CD45A	⌀ 110 - ⌀ 130	API 2 3/8" Reg

Working Pressure	Impact Rate at 1.5 Mpa	Recommended Rotation Speed	Air Consumption		
			1.0 Mpa	1.8 Mpa	2.4 Mpa
1.0 - 2.5 Mpa	30 Hz	25 - 35 r/min	6 m^3/min	10 m^3/min	15 m^3/min

QL40 4" HAMMER

HIGH AIR PRESSURE DTH HAMMERS WITH FOOT VALVE	PART DESCRIPTION	WEIGHT (KG)	PART NUMBER

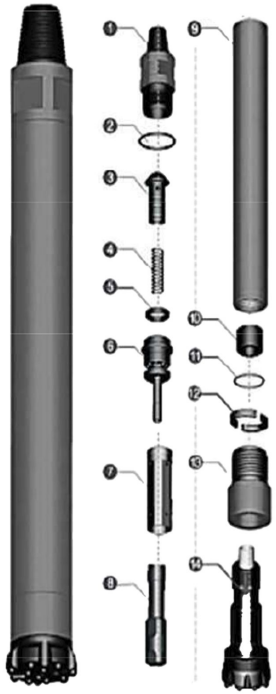

1	Top Sub	6.50	CQL40-01
2	"O" Ring of Top Sub	0.01	CQL40-02
3	Check Valve	0.42	CQL40-03
4	Spring	0.04	CQL40-04
5	Compression Buffer	0.04	CQL40-05
6	Air Distributor	2.20	CQL40-06
7	Internal Cylinder	2.30	CQL40-07
8	Piston	8.80	CQL40-08
9	External Cylinder	16.50	CQL40-09
10	Guided Sleeve	0.80	CQL40-10
11	"O" Ring of Stop Ring	0.01	CQL40-11
12	Stop Ring	0.30	CQL40-12
13	Drive Chuck	3.00	CQL40-13
14	Drill Bit		CQL40-14

Technical Parameters

Length (Without Bit)	Weight (Without Bit)	External Diameter	Bit Shank	Hole Range	Connection Thread
1097 mm	41 Kg	⌀99 mm	QL40 CQL40	⌀110 - ⌀135	API 2 3/8" Reg

Working Pressure	Impact Rate at 1.5 Mpa	Recommended Rotation Speed	Air Consumption		
			1.0 Mpa	1.8 Mpa	2.4 Mpa
1.0 - 2.5 Mpa	27 Hz	25 - 40 r/min	6 m^3/min	10 m^3/min	15 m^3/min

DHD350 5" HAMMER

HIGH AIR PRESSURE DTH HAMMERS WITH FOOT VALVE	PART DESCRIPTION	WEIGHT (KG)	PART NUMBER

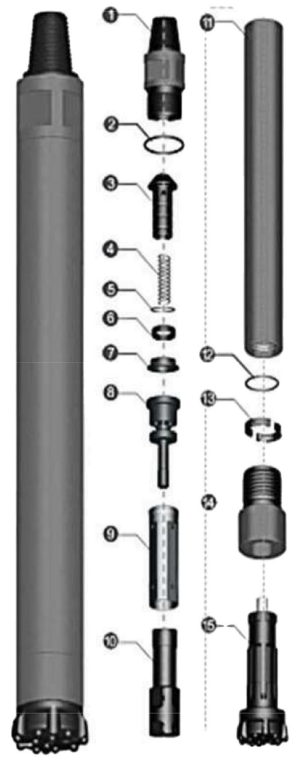

1	Top Sub	15.0	CD55-01
2	"O" Ring of Top Sub	0.01	CD55-02
3	Check Valve	1.00	CD55-03
4	Spring	0.04	CD55-04
5	Ring	0.10	CD55-05
6	Compression Buffer	0.05	CD55-06
7	Compression Buffer Seat	0.40	CD55-07
8	Air Distributor	4.00	CD55-08
9	Internal Cylinder	4.70	CD55-09
10	Piston	15.50	CD55-10
11	External Cylinder	30.00	CD55-11
12	"O" Ring of Stop Ring	0.01	CD55-12
13	Stop Ring	0.30	CD55-13
14	Drive Chuck	6.40	CD55-14
15	Drill Bit		CD55-15

Technical Parameters

Length (Without Bit)	Weight (Without Bit)	External Diameter	Bit Shank	Hole Range	Connection Thread
1214 mm	77.5 Kg	⌀125 mm	Cop54 DHD350R CD55	⌀135 -⌀ 155	API 2 3/8" Reg API 3 1/2" Reg

Working Pressure	Impact Rate at 1.5 Mpa	Recommended Rotation Speed	Air Consumption		
			1.0 Mpa	1.8 Mpa	2.4 Mpa
1.0 - 2.5 Mpa	25 Hz	25 - 35 r/min	9 m^3/min	15 m^3/min	23 m^3/min

QL50 5" HAMMER

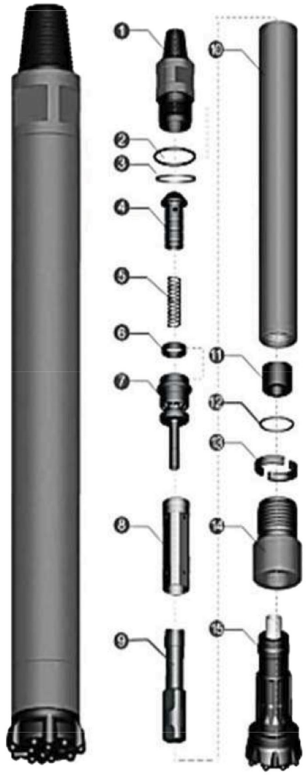

HIGH AIR PRESSURE DTH HAMMERS WITH FOOT VALVE	PART DESCRIPTION	WEIGHT (KG)	PART NUMBER
1	Top Sub	15.0	CQL50-01
2	"O" Ring of Top Sub	0.015	CQL50-02
3	Breakout Ring of Top Sub	0.15	CQL50-03
4	Check Valve	1.00	CQL50-04
5	Spring	0.10	CQL50-05
6	Compression Buffer	0.10	CQL50-06
7	Air Distributor	3.50	CQL50-07
8	Internal Cylinder	4.20	CQL50-08
9	Piston	19.0	CQL50-09
10	External Cylinder	24.6	CQL50-10
11	Guided Sleeve	0.90	CQL50-11
12	"O" Ring of Stop Ring	0.01	CQL50-12
13	Stop Ring	0.40	CQL50-13
14	Drive Chuck	4.60	CQL50-14
15	Drill Bit		CQL50-15

Technical Parameters

Length (Without Bit)	Weight (Without Bit)	External Diameter	Bit Shank	Hole Range	Connection Thread
1156 mm	73.0 Kg	⌀125 mm	Cop54 Gold QL50 CQL50	⌀135 -⌀ 155	API 3 1/2" Reg

Working Pressure	Impact Rate at 1.7 Mpa	Recommended Rotation Speed	Air Consumption		
			1.0 Mpa	1.8 Mpa	2.4 Mpa
1.0 - 2.5 Mpa	25 Hz	25 - 35 r/min	9 m^3/min	15 m^3/min	23 m^3/min

MISSION 50 5" HAMMER

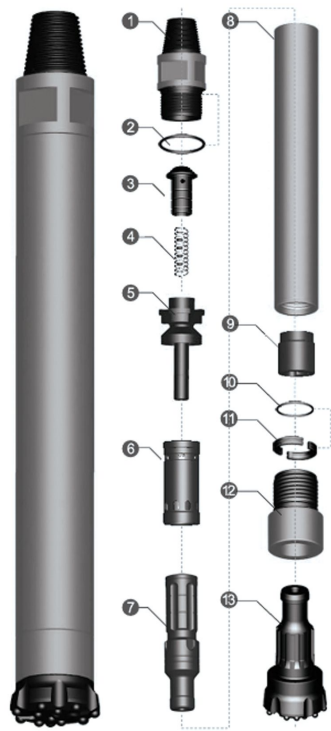

HIGH AIR PRESSURE DTH HAMMERS WITH FOOT VALVE	PART DESCRIPTION	WEIGHT (KG)	PART NUMBER
1	Top Sub	13.7	CM50A-01
2	"O" Ring of Top Sub	0.015	CM50A-02
3	Check Valve	0.70	CM50A-03
4	Spring	0.10	CM50A-04
5	Air Distributor	2.00	CM50A-05
6	Internal Cylinder	2.80	CM50A-06
7	Piston	15.0	CM50A-07
8	External Cylinder	22.3	CM50A-08
9	Guided Sleeve	2.60	CM50A-09
10	"O" Ring of Stop Ring	0.01	CM50A-10
11	Stop Ring	0.70	CM50A-11
12	Drive Chuck	6.50	CM50A-12
13	Drill Bit		CM50A-13

Technical Parameters

Length (Without Bit)	Weight (Without Bit)	External Diameter	Bit Shank	Hole Range	Connection Thread
1110 mm	66.4 Kg	⌀125 mm	Mission50 CM50A	⌀135 -⌀ 155	API 2 3/8" Reg API 3 1/2" Reg

Working Pressure	Impact Rate at 1.7 Mpa	Recommended Rotation Speed	Air Consumption		
			1.0 Mpa	1.8 Mpa	2.4 Mpa
1.0 - 2.5 Mpa	28 Hz	20 - 35 r/min	7 m^3/min	14 m^3/min	19 m^3/min

QL50 5" HAMMER WITHOUT FOOT VALVE

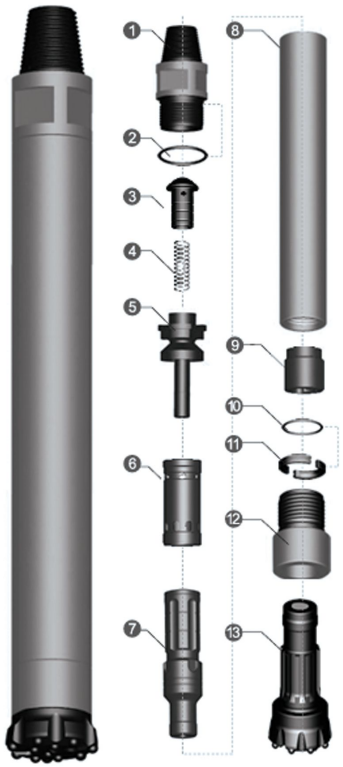

HIGH AIR PRESSURE DTH HAMMERS WITHOUT FOOT VALVE	PART DESCRIPTION	WEIGHT (KG)	PART NUMBER
1	Top Sub	13.7	CQL50A-01
2	"O" Ring of Top Sub	0.015	CQL50A-02
3	Check Valve	0.70	CQL50A-03
4	Spring	0.10	CQL50A-04
5	Air Distributor	2.00	CQL50A-05
6	Internal Cylinder	2.70	CQL50A-06
7	Piston	3.50	CQL50A-07
8	External Cylinder	15.0	CQL50A-08
9	Guided Sleeve	3.00	CQL50A-09
10	"O" Ring of Stop Ring	0.01	CQL50A-10
11	Stop Ring	0.40	CQL50A-11
12	Drive Chuck	4.50	CQL50A-12
13	Drill Bit		CQL50A-13

Technical Parameters

Length (Without Bit)	Weight (Without Bit)	External Diameter	Bit Shank	Hole Range	Connection Thread
1090 mm	64.4 Kg	⌀125 mm	QI50 COP54 Gold CQL50A	⌀135 -⌀ 155	API 2 3/8" Reg API 3 1/2" Reg

Working Pressure	Impact Rate at 1.7 Mpa	Recommended Rotation Speed	Air Consumption		
			1.0 Mpa	1.8 Mpa	2.4 Mpa
1.0 - 2.5 Mpa	28 Hz	20 - 35 r/min	7 m^3/min	14 m^3/min	19 m^3/min

QL60 6" HAMMER

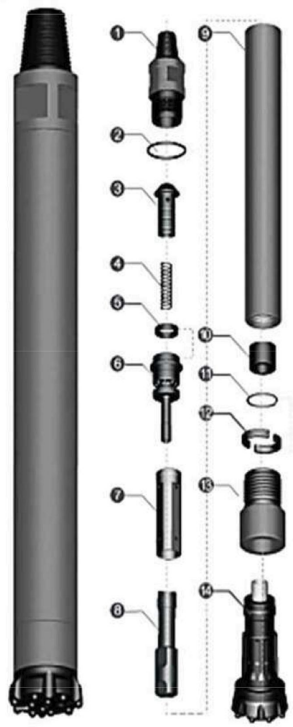

HIGH AIR PRESSURE DTH HAMMERS WITH FOOT VALVE	PART DESCRIPTION	WEIGHT (KG)	PART NUMBER
1	Top Sub	20.00	CQL60-01
2	"O" Ring of Top Sub	0.02	CQL60-02
3	Check Valve	1.00	CQL60-03
4	Spring	1.50	CQL60-04
5	Compression Buffer	0.10	CQL60-05
6	Air Distributor	6.00	CQL60-06
7	Internal Cylinder	5.00	CQL60-07
8	Piston	23.50	CQL60-08
9	External Cylinder	31.00	CQL60-09
10	Guided Sleeve	1.00	CQL60-10
11	"O" Ring of Stop Ring	0.02	CQL60-11
12	Stop Ring	0.60	CQL60-12
13	Drive Chuck	5.40	CQL60-13
14	Drill Bit		CQL60-14

Technical Parameters

Length (Without Bit)	Weight (Without Bit)	External Diameter	Bit Shank	Hole Range	Connection Thread
1212 mm	95.00 Kg	⌀148 mm	Cop64 Gold QL60 CQL60	⌀155 - ⌀190	API 3 1/2" Reg

Working Pressure	Impact Rate at 1.7 Mpa	Recommended Rotation Speed	Air Consumption		
			1.0 Mpa	1.8 Mpa	2.4 Mpa
1.0 - 2.5 Mpa	23 Hz	20 - 30 r/min	10 m^3/min	20 m^3/min	28.5 m^3/min

MISSION60 6" HAMMER WITHOUT FOOT VALVE

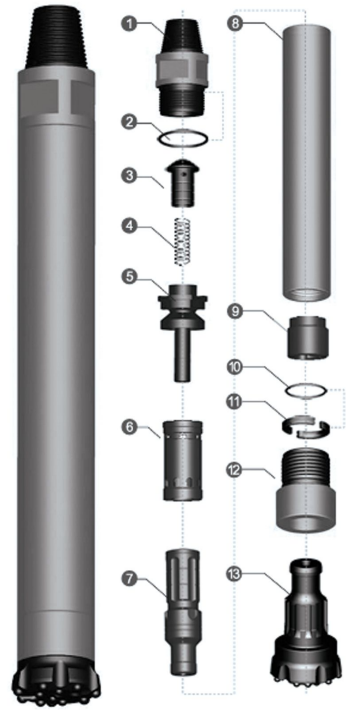

HIGH AIR PRESSURE DTH HAMMERS WITHOUT FOOT VALVE	PART DESCRIPTION	WEIGHT (KG)	PART NUMBER
1	Top Sub	20.00	CM60A-01
2	"O" Ring of Top Sub	0.015	CM60A-02
3	Check Valve	0.70	CM60A-03
4	Spring	0.10	CM60A-04
5	Air Distributor	3.50	CM60A-05
6	Internal Cylinder	4.20	CM60A-06
7	Piston	23.00	CM60A-07
8	External Cylinder	35.00	CM60A-08
9	Guided Sleeve	4.80	CM60A-09
10	"O" Ring of Stop Ring	0.01	CM60A-10
11	Stop Ring	0.80	CM60A-11
12	Drive Chuck	4.20	CM60A-12
13	Drill Bit		CM60A-13

Technical Parameters

Length (Without Bit)	Weight (Without Bit)	External Diameter	Bit Shank	Hole Range	Connection Thread
1161mm	96.3 Kg	⌀148 mm	Mission60 CM60A	⌀155 - ⌀190	API 3 1/2" Reg

Working Pressure	Impact Rate at 1.7 Mpa	Recommended Rotation Speed	Air Consumption		
			1.0 Mpa	1.8 Mpa	2.4 Mpa
1.0 - 2.5 Mpa	25 Hz	20 - 30 r/min	9 m^3/min	18 m^3/min	26 m^3/min

QLA60A 6" HAMMER WITHOUT FOOT VALVE

HIGH AIR PRESSURE DTH HAMMERS WITHOUT FOOT VALVE	PART DESCRIPTION	WEIGHT (KG)	PART NUMBER

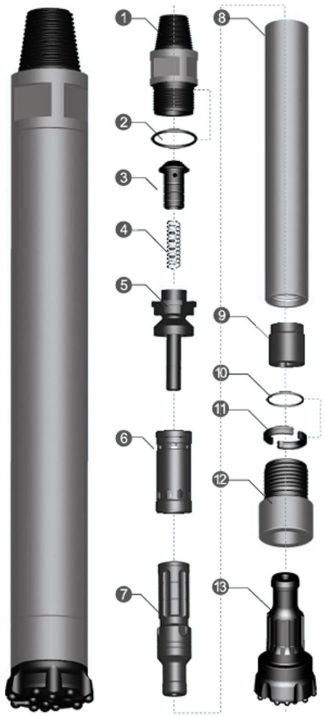

1	Top Sub	20.00	CD85-01
2	"O" Ring of Top Sub	0.015	CD85-02
3	Check Valve	0.70	CD85-03
4	Spring	0.10	CD85-04
5	Air Distributor	3.50	CD85-05
6	Internal Cylinder	4.20	CD85-06
7	Piston	23.00	CD85-07
8	External Cylinder	30.00	CD85-08
9	Guided Sleeve	4.00	CD85-09
10	"O" Ring of Stop Ring	0.01	CD85-10
11	Stop Ring	0.60	CD85-11
12	Drive Chuck	5.50	CD85-12
13	Drill Bit		CD85-13

Technical Parameters

Length (Without Bit)	Weight (Without Bit)	External Diameter	Bit Shank	Hole Range	Connection Thread
1183mm	92.00 Kg	⌀148 mm	COP64 Gold QL60 CQL60A	⌀155 - ⌀190	API 3 1/2" Reg

Working Pressure	Impact Rate at 1.7 Mpa	Recommended Rotation Speed	Air Consumption		
			1.0 Mpa	1.8 Mpa	2.4 Mpa
1.0 - 2.5 Mpa	25 Hz	20 - 30 r/min	9 m^3/min	18 m^3/min	26 m^3/min

QL80 8" HAMMER

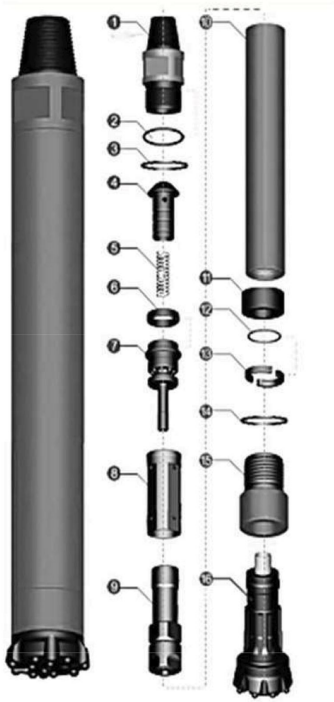

HIGH AIR PRESSURE DTH HAMMERS WITH FOOT VALVE	PART DESCRIPTION	WEIGHT (KG)	PART NUMBER
1	Top Sub	41.00	CQL80-01
2	"O" Ring of Top Sub	0.02	CQL80-02
3	Breakout Ring of Top Sub	0.30	CQL80-03
4	Check Valve	1.50	CQL80-04
5	Spring	0.10	CQL80-05
6	Compression Buffer	0.42	CQL80-06
7	Air Distributor	13.00	CQL80-07
8	Internal Cylinder	8.60	CQL80-08
9	Piston	41.00	CQL80-09
10	External Cylinder	60.00	CQL80-10
11	Guided Sleeve	2.20	CQL80-11
12	"O" Ring of Stop Ring	0.02	CQL80-12
13	Stop Ring	1.20	CQL80-13
14	Breakout Ring of Drive Chuck	0.30	CQL80-14
15	Drive Chuck	12.00	CQL80-15
16	Drill Bit		CQL80-16

Technical Parameters

Length (Without Bit)	Weight (Without Bit)	External Diameter	Bit Shank	Hole Range	Connection Thread
1465mm	182.00 Kg	⌀185 mm	QL80 CQL80	⌀195 - ⌀254	API 4 1/2" Reg

Working Pressure	Impact Rate at 1.7 Mpa	Recommended Rotation Speed	Air Consumption		
			1.0 Mpa	1.8 Mpa	2.4 Mpa
1.0 - 2.5 Mpa	20 Hz	15 - 25 r/min	15 m^3/min	26 m^3/min	34 m^3/min

BIT FACE SHAPE SELECTION

DROP CENTER
FOR HIGH PENETRATION RATES IN SOFT TO MEDIUM HARD AND FISSURED ROCK FORMATIONS. LOW TO MEDIUM AIR PRESSURES. MAXIMUM HOLE DEVIATION CONTROL.

CONCAVE FACE
THE ALL-ROUND APPLICATION BIT FACE SPECIAL FOR MEDIUM HARD AND HOMOGENEOUS ROCK FORMATIONS. GOOD HOLE DEVIATION CONTROL AND GOOD FLUSHING CAPACITY.

CONVEX FACE
FOR HIGH PENETRATION RATES IN SOFT TO MEDIUM-HARD WITH LOW TO MEDIUM AIR PRESSURES. IT IS THE MOST RESISTANCE TO STEEL WASH, AND MAY REDUCE THE LOAD AND WEAR ON THE GAUGE BUTTONS, BUT POOR HOLE DEVIATION CONTROL.

FLAT FACE
THIS KIND OF FACE SHAPE IS SUITABLE FOR VERY HARD AND ABRASIVE ROCK FORMATIONS IN APPLICATIONS WITH HIGH AIR PRESSURES. GOOD PENETRATION RATES AN RESISTANCE TO STEEL WASH.

DOUBLE GAUGE FACE
THIS KIND OF FACE SHAPE IS SUITABLE FOR FAST PENETRATION RATES IN MEDIUM TO HARD ROCK FORMATIONS. DESIGNED FOR HIGH AIR PRESSURES AND GOOD RESISTANCE TO STEEL WASH STEP GAUGE BIT.

TECHNICAL PARAMETERS

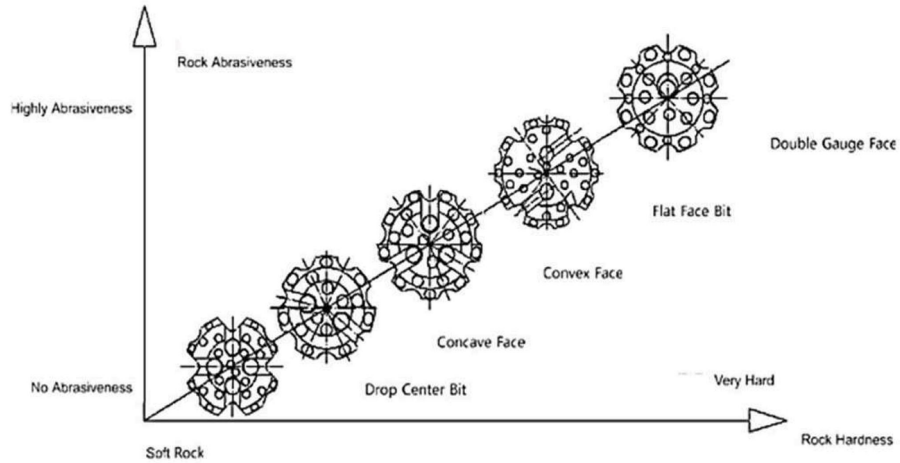

CARBIDE BUTTON SHAPE OPTIONS

DOMED / SPHERICAL BUTTON

DOMED /SPHERICAL BUTTONS ARE USUALLY USED AS GAUGE BUTTONS OF DTH BITS, SUITABLE FOR VERY ABRASIVE AND VERY HARD FORMATIONS.

PARABOLIC/SEMI-BALLISTIC BUTTON

PARABOLIC BUTTONS ARE USUALLY USED AS GAUGE BUTTONS AND FRONT BUTTONS OF DTH BITS, SUITABLE FOR MEDIUM ABRASIVE AND HARD FORMATIONS.

BALLISTIC BUTTON

BALLISTIC BUTTONS ARE USUALLY USED AS FRONT BUTTONS OF DTH BITS, SUITABLE FOR MEDIUM ABRASIVE AND MEDIUM HARD FORMATIONS. THEY CAN ALSO BE USED AS GAUGE BUTTONS IF THE ROCK IS SOFT.

SHARP BUTTON

SHARP BUTTONS ARE USUALLY USED AS FRONT BUTTONS OF DTH BITS FOR SOFT FORMATIONS WHERE FAST PENETRATION RATES ARE POSSIBLE AND BUTTON BREAKAGE IS MINIMAL.

FLAT BUTTON

FLAT BUTTONS ARE USUALLY USED AS PROTECTION BUTTONS TO REDUCE WEAR ON RUBBING SURFACES OF DTH BITS.

3" 3" BIT Data Referenced By CD35 Flat Face Bit

(Specification of Products): CD35 IR 3.5

(Specification of Products): Mission30

(Specification of Products): COP32

(Specification of Products): QL30

Diameter		No. x Button Diameter		Button Angle	Flushing Holes	Weight (Kg)	Part No.
mm	inch	Gauge Buttons	Front Buttons				
90	3 9/16	6 x Φ14	4 x Φ12	38	2 x Φ14	4.5	CD35-90
92	3 5/8	6 x Φ14	4 x Φ12	38	2 x Φ14	4.6	CD35-92
95	3 3/4	6 x Φ14	4 x Φ12	38	2 x Φ14	4.7	CD35-95
100	3 15/16	6 x Φ14	5 x Φ13	38	2 x Φ14	4.8	CD35-100
105	4 1/8	6 x Φ14	5 x Φ13	38	2 x Φ14	5.0	CD35-105
110	4 5/16	6 x Φ14	6 x Φ13	38	2 x Φ14	5.5	CD35-110

4″ 4″ Bit Data Referenced By CD45 Flat Face Bit

(Specification of Products): CD45
DHD240A COP44

(Specification of Products): Mission40

(Specification of Products): SD4

(Specification of Products): QL40

Diameter		No. x Button Diameter		Button Angle	Flushing Holes	Weight (Kg)	Part No.
mm	inch	Gauge Buttons	Front Buttons				
105	4 1/8	6 x Φ14	4 x Φ13	38	2 x Φ18	7.5	CD45-105
110	4 5/16	7 x Φ14	4 x Φ13	38	2 x Φ18	7.8	CD45-110
115	4 1/2	7 x Φ14	4 x Φ13	38	2 x Φ18	8.5	CD45-115
120	4 3/4	8 x Φ14	5 x Φ13	38	2 x Φ18	8.8	CD45-120
125	4 15/16	8 x Φ14	5 x Φ13	38	2 x Φ18	9.0	CD45-125
130	5 1/8	8 x Φ14	6 x Φ14	38	2 x Φ18	9.4	CD45-130

5″ 5″ Bit Data Referenced By CD55 Flat Face Bit

(Specification of Products): HD55
DHD350R COP54

(Specification of Products): Mission50

(Specification of Products): SD5

(Specification of Products): QL50

Diameter		No. x Button Diameter		Button Angle	Flushing Holes	Weight (Kg)	Part No.
mm	inch	Gauge Buttons	Front Buttons				
130	5 1/8	7 x Φ16	7 x Φ14	38	2 x Φ20	15.0	CD55-130
135	5 1/4	7 x Φ18	7 x Φ14	38	2 x Φ20	15.5	CD55-135
140	5 1/2	8 x Φ16	8 x Φ14	38	2 x Φ20	16.0	CD55-140
146	5 3/4	8 x Φ18	8 x Φ15	38	2 x Φ20	16.5	CD55-146
150	5 7/8	8 x Φ18	8 x Φ15	38	2 x Φ20	16.7	CD55-150
152	6	8 x Φ18	8 x Φ15	38	2 x Φ20	16.8	CD55-152
156	6 1/8	8 x Φ18	8 x Φ16	38	2 x Φ20	17.0	CD55-156

6″

6″ BIT Data Referenced By CD65 Concave Face Bit

(Specification of Products) : CD65
DHD360R COP64

(Specification of Products) : Mission60

(Specification of Products) : SD6

(Specification of Products) : QL60

Diameter		No. x Button Diameter		Button Angle	Flushing Holes	Weight (Kg)	Part No.
mm	inch	Gauge Buttons	Front Buttons				
152	6	8 x Φ18	4 xΦ16+4xΦ14	38	2 x Φ26	23	CD65-152
156	6 1/4	8 x Φ18	4 xΦ16+4xΦ14	38	2 x Φ26	23.5	CD65-156
160	6 1/4	8 x Φ18	4 xΦ16+4xΦ14	38	2 x Φ26	23.5	CD65-159
165	6 1/2	8 x Φ18	8 x Φ16	38	2 x Φ26	24.0	CD65-165
171	6 3/4	8 x Φ18	10 x Φ16	38	2 x Φ26	25.0	CD65-171
185	7 1/4	9 x Φ18	10 x Φ16	38	2 x Φ22	27.0	CD65-185
190	7 1/2	10 x Φ18	13 x Φ16	38	2 x Φ26	28.0	CD65-190
203	8	10 x Φ18	14 x Φ16	38	2 x Φ26	31.0	CD65-203

8″

8″ BIT Data Referenced By CD85 Concave Face Bit

(Specification of Products) : CD85
DHD380 COP84

(Specification of Products) : Mission80

(Specification of Products) : SD8

(Specification of Products) : QL80

Diameter		No. x Button Diameter		Button Angle	Flushing Holes	Weight (Kg)	Part No.
mm	inch	Gauge Buttons	Front Buttons				
200	7 7/8	10 x Φ18	8 xΦ18+6xΦ16	38	2 x Φ30	46	CD85-200
203	8	10 x Φ18	8 xΦ18+6xΦ16	38	2 x Φ30	47	CD85-203
216	8 1/2	10 x Φ18	8 xΦ18+6xΦ16	38	2 x Φ30	53	CD85-216
219	8 5/8	10 x Φ18	8 xΦ18+6xΦ16	38	2 x Φ30	54	CD85-219
222	8 3/4	10 x Φ18	8 xΦ18+6xΦ16	38	2 x Φ30	55	CD85-222
225	8 7/8	10 x Φ18	8 xΦ18+6xΦ16	38	2 x Φ30	56	CD85-225
229	9	10 x Φ18	8 xΦ18+7xΦ16	38	2 x Φ30	57	CD85-229
235	9 1/4	12 x Φ18	20 x Φ16	38	2 x Φ30	58	CD85-235
241	9 1/2	12 x Φ18	20 x Φ16	38	2 x Φ30	58	CD85-241
254	10	12 x Φ19	8 xΦ18+18xΦ16	38	2 x Φ30	61	CD85-254
270	10 5/8	12 x Φ19	8 xΦ18+19xΦ16	38	2 x Φ30	62	CD85-270
280	11	12 x Φ19	8 xΦ18+21xΦ16	38	3 x Φ26	67	CD85-280

*ALL PIPES, ADAPTORS, AIRBOXES AND STAFFAS SUPPLIED TO CLIENT'S SPECIFIC REQUIREMENTS

PART DESCRIPTION & WEIGHT

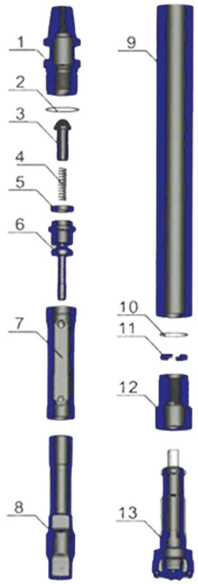

	PART DESCRIPTION	WEIGHT (KG)
1.	TOP SUB	4.40
2.	O-RING OF TOP SUB	0.005
3.	CHECK VALVE	0.20
4.	SPRING	0.02
5.	COMPRESSION BUFFER	0.02
6.	AIR DISTRUBUTOR	1.40
7.	INTERNAL CYLINDER	1.50
8.	PISTON	5.60
9.	EXTERNAL CYLINDER	9.80
10.	O-RING OF STOP RING	0.005
11.	STOP RING	0.15
12.	DRIVE CHUCK	1.90
13.	DRIL BIT	—

DISASSEMBLY OF DTH HAMMER:

STEP 1:

TURN OUT THE DRIVE CHUCK WITH THE DRILL BIT:

NOTE: GUIDE SLEEVE CANNOT BE REMOVED

STEP 2:

TURN OUT THE TOP SUB, LIFT OUT CHECK VALVE AND SPRING:

STEP 3:

LIFT OUT THE AIR DISTRIBUTOR AND INNER CYLINDER SPARE PARTS FROM THE TOP SUB SIDE AND THEN REMOVE OUT THE PISTON:

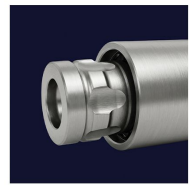

STEP 4:

AFTER DISASSEMBLE, CLEAN ALL SPARES PARTS WITH DIESEL, CLEAN UP AND OBSERVE THEM AFTER GREASING.

CLEANING OF DTH HAMMER:

- ALL SCRATCHES MUST BE REMOVED BY FINE EMERY PAPER.
- COMPONENTS MUST BE LUBRICATED BY SPECIAL GRADE OIL – THE SAME OIL USED IN THE DRILL RIG.
- SPRAY SOME PRESERVATIVES IF THE SPARE PARTS ARE SERIOUSLY CORRODED. ENSURE THAT ENOUGH IS APPLIED TO KEEP THE THREADS CLEAN AND DRY.

LUBRICATION OF DTH HAMMER:

- INTERNAL PARTS REQUIRE PROPER LUBRICATION DUE TO FREQUENT PISTON IMPACT AND PRECISE CLEARANCES.
- LACK OF LUBRICATION CAN CAUSE FRICTION, HEAT BUILDUP, AND SURFACE CRACKS.
- LUBRICATION IS CRUCIAL FOR MAXIMIZING THE HAMMER'S SERVICE LIFE.
- USE ONLY CLEAN MACHINE OIL; USED OR UNCLEAN OIL MAY CONTAIN IMPURITIES THAT CAN JAM OR DAMAGE THE HAMMER.

PURPOSE OF LUBRICATION FOR DTH HAMMER:

- REDUCES FRICTION DAMAGE OF MOVING PARTS.
- ANTI-CORROSION.
- SEALING.

ASSEMBLY OF DTH HAMMER:

STEP 1:

SEQUENCE OF ASSEMBLY IS: GUIDE BUSH ⇨ DRIVE CHUCK

STEP 2:

CORRECT ASSEMBLY OF THE AIR DISTRIBUTOR AND THE INNER CYLINDER:

STEP 3:

INSTALL THE PISTON FROM THE OUTER CYLINDER HEAD END AND THEN INSTALL THE AIR DISTRIBUTOR AND INNER COMPONENTS THAT ALREADY MATCHED MEASURES:

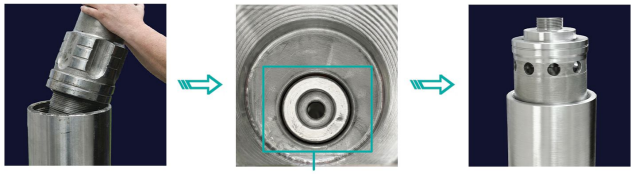

CORRECT POSITION OF PISTON

STEP 4:

INSTALL THE SPRING AND CHECK VALVE FROM THE OUTER CYLINDER TOP SUB SIDE, INSTALL THE TOP SUB FROM THE OUTER CYLINDER JOINT TO FINISH THE ASSEMBLY OF THE DTH HAMMER: